PRODUCT DATASHEET

ELEGANT
50W SENSOR LED FLOODLIGHT

5224

Areas of Usage

- Industrial Facilities
- Sports Area
- Park & Garden

General Features

Housing Material	:	ADC12 Aluminum
Diffuser Material	:	Tempered Glass
Product Color	:	RAL 9005
Impact Resistance	:	IK07
IP Rating	:	IP44
Operating Temperature	:	-20°C ~ +40°C
LED Lifespan	:	50.000 h - L70 @ Ta= 40°C
Product Lifespan	:	30.000 h
Dimmability	:	Non-Dimmable
Mounting Type	:	Surface Mounted

Sensor Features

Sensing Angle	:	360°
Sensing Distance	:	2 - 8m
Ambient Light	:	5 - 1000 Lux
Lighting Operating Time	:	12 s - 5 m
IP Rating of Sensor	:	IP44

Electrical Features

Power	:	50 W
Input Voltage	:	220-240V AC
Input Frequency	:	50/60 Hz
Power Factor	:	≥0,9
Protection Class	:	I

According to EU 2019/2015 Energy efficiency directive, there is a tolerance of ±10% for power and luminous flux values.

Optical Features

Luminous Flux	:	4000 lm
Luminous Efficacy	:	80 lm/W
Color Rendering Index CRI	:	≥80
Beam Angle	:	120°
Light Source	:	Mid Power LED
Color Temperature	:	6500K
Photobiological Safety Group	:	RG1

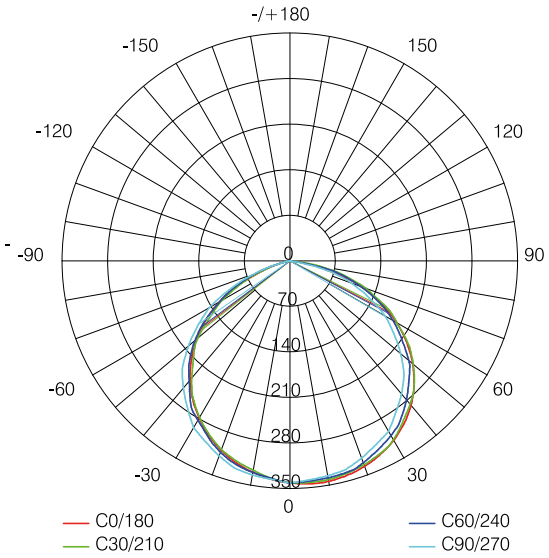

Light Distribution Curve (Polar)

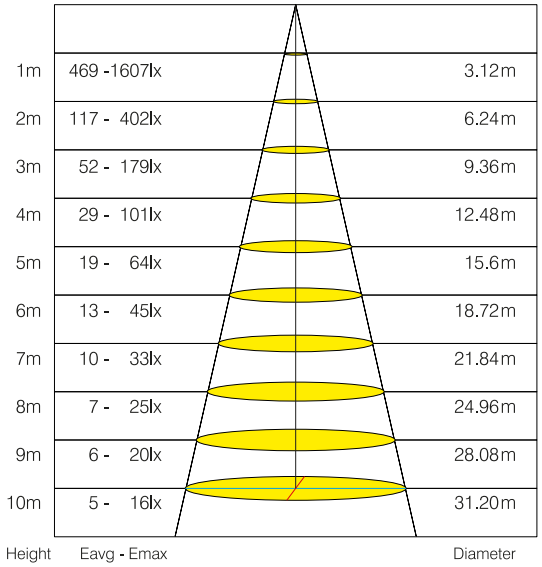

Light Distribution Curve (Cone)

Dimensions & Weight

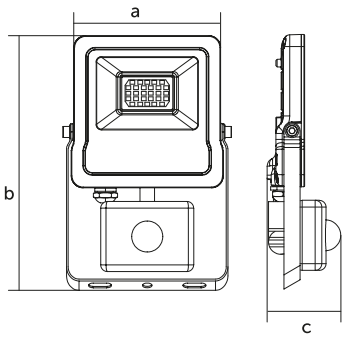

a	b	c	Weight
200mm	287mm	57mm	1000g

Kablo Uzunluğu

300mm

Kablo Rakoru

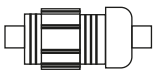

M12.5X1.5

Packaging Data

Product Code	Units per Box (pcs)	Units per Carton (pcs)	Dimensions (width x length x heigth) (mm)	Weight (kg)
5224	1	12	335 x 455 x 385	14,38

Color Temperature Options

Product Code	Color Temperature (Kelvin)	Luminous Flux (lm)
5224-01	6500	4000
5224-02	3000	3920

Subject to technical modifications without prior notice.